POWHATAN COUNTY
DECKS, PORCHES, STAIRS AND RAMPS

DIRECTIONS

CHESTERFIELD COUNTY DEPARTMENT OF BUILDING INSPECTIONS HAS PREPARED THIS GUIDE FOR BASIC DECKS,PORCHES, STAIRS AND RAMPS. YOU MAY USE IT BY FILLING IN THE DESIGN SHEET(S) WITH THE SPECIFICATIONS OF YOUR DECK OR PORCH.

IF THE DECK OR PORCH IS BEING CONSTRUCTED ON A NEW HOUSE OR IS BEING BUILT AS AN ADDITION TO AN EXISTING HOUSE, CONSTRUCTION DOCUMENTS (i.e. PLANS) ARE REQUIRED, INCLUDING:
1. PLAN VIEW OF THE DECK OR PORCH, INCLUDING THE LOCATION OF THE FOOTINGS,
2. PLAT SHOWING EXACT LOCATION AND DIMENSIONS TO THE PROPERTY LINES,
3. SECTION VIEW OF THE DECK OR PORCH, INCLUDING DETAILS OF THE END AWAY FROM THE HOUSE, AND THE END NEAREST THE HOUSE. THE SECTION SHOULD SHOW THE MATERIALS, THE FOOTINGS AND THE HEIGHTS OF ALL THE COMPONENTS.

SUBMIT
1 COPY OF YOUR PLAT PLAN,
2 COPIES OF THE DECK PLAN AND SPECIFICATION SHEETS,
2 COPIES OF THE DETAILS TO BE USED,INCLUDING THE STAIR AND/OR RAMP SHEET.

YOU WILL NEED THE FOLLOWING INSPECTIONS:
A. FOOTING INSPECTION PRIOR TO THE PLACEMENT OF CONCRETE.
B. FINAL INSPECTION.
NOTE: THE FOOTING INSPECTION AND FINAL INSPECTION CAN BE COMBINED INTO A SINGLE INSPECTION VISIT IF YOU USE SOLID CONCRETE BLOCKS AS THE FOOTING AND LEAVE THE FOOTINGS EXPOSED FOR THE INSPECTOR.

DECK AND PORCH DESIGN

THESE DESIGN SHEETS ARE GUIDELINES FOR A BASIC, SINGLE LEVEL DECKS AND PORCHES. IF A SPA, HOT TUB OR OTHER SPECIAL USE IS INTENDED, SEEK THE HELP OF A DESIGN PROFESSIONAL. THERE ARE MANY EXCELLENT REFERENCE BOOKS AVAILABLE FROM HOME IMPROVEMENT STORES, THE LIBRARY OR THE INTERNET TO PROVIDE CUSTOM DESIGNS AND CONSTRUCION METHODS.

THESE DESIGN SHEETS ARE BASED ON THE PRESCRIPTIVE REQUIREMENTS OF THE 2012 VIRGINIA RESIDENTIAL CODE (VA-IRC) AND IN SOME CASES EXCEED THE CODE BASED ON CURRENT "BEST PRACTICES" ENCOURAGED IN CHESTERFIELD COUNTY. THIS DOCUMENT IS NOT INTENDED TO PRECLUDE THE USE OF OTHER CONSTRUCTION METHODS OR MATERIALS.

GENERAL REQUIREMENTS

1. DECK FRAMING IS BASED ON 40 LBS PER SQ FT LIVE LOAD AND 10 LBS PER SQ FT DEAD LOAD. THE PORCH ROOF IS BASED ON 20 LBS PER SQ FT SNOW LOAD AND 10 LBS PER SQ FT DEAD LOAD.

2. ALL DECK MATERIALS SHALL BE PRESERATIVE TREATED (P.T.) LUMBER OR COMPOSITE MATERIAL SPECIFICALLY DESIGNED FOR DECKS AND OUTSIDE USE, OR FOR USE IN CONTACT WITH THE GROUND. ALL CUT MATERIALS SHALL HAVE THEIR ENDS TREATED WITH AN APPROVED PERSERVATIVE, SUCH AS COPPER NAPHTHENATE.

3. TO RESIST CORROSION FOR USE WITH PRESERVATIVE TREATED (P.T.) WOOD , THE FOLLOWING IS REQUIRED:
   - BORATE TREATED 2X LUMBER MAY NOT BE USED IN CONTACT WITH THE GROUND.
   - ALL SCREWS, BOLTS, NAILS AND FASTENERS SHALL BE HOT-DIPPED GALVANIZED (HDG IN ACCORDANCE WITH ASTM A-153 OR B-695, CLASS 55) , STAINLESS STEEL, OR AN APPROVED SPECIAL COATED FASTENER FOR USE WITH ALKALINE COPPER QUAT (ACQ) PRESERVATIVE TREATED LUMBER.
   - WHERE A MATERIAL IS LISTED AS "HDG" IN THIS GUIDE, ANY OF THE ABOVE MENTIONED MATERIALS MAY BE SUBSTITUTED.

4. FLASHING SHALL BE A MINIMUM 19 MIL THICK CORROSION-RESISTANT METAL OR AN APPROVED NON-METALIC MATERIAL. BRIGHT ALUMINIM FLASHING IS NOT ALLOWED.

5. IF YOU ARE ATTACHING THE DECK TO THE HOUSE, THE HOUSE SHALL HAVE A PRESERVATIVE TREATED, NOMINAL SIZE, WOOD BAND BOARD ALONG THE ENTIRE LENGTH OF THE ATTACHMENT AREA. PLYWOOD IS NOT ACCEPTABLE.

6. WHERE THRU BOLTS ARE TO BE USED, COMPATIBLE SIZED WASHERS AND NUTS ARE ASSUMED TO BE PART OF THE ASSEMBLY.

7. DO NOT ATTACH THE LEDGER BOARD TO OR THROUGH BRICK VENEER.

8. DO NOT CONSTRUCT FOOTINGS OVER UTILITY LINES. CALL MISS UTILITY AT 811 BEFORE YOU START!

9. DO NOT CONSTRUCT THE FOOTINGS OVER A SEPTIC FIELD. SEEK ADVICE FROM THE HEALTH DEPARTMENT.

10. DO NOT ATTACH A DECK OR PORCH TO A TRAILER OR MOBILE HOME.

11. CHESTERFIELD DOES NOT PERMIT "ON-GRADE DECK BLOCKS" TO BE USED. THESE ARE TAPERED SHAPED CONCRETE BLOCKS INTENDED TO BE SET ON THE TOP OF THE SOIL. THEY HAVE SLOTS AND RECESSES IN THEM FOR STRUCTURAL MEMBERS.

HOW TO USE THIS GUIDE

1. DECIDE ON THE APPROXIMATE DIMENSIONS AND LOCATION OF THE DECK OR PORCH YOU WANT TO BUILD.

2. DECIDE ON THE FRAMING STYLE YOU PREFER: CANTILEVERED, FREE STANDING, FLUSH STYLE, ETC.

3. NEXT, MAKE DECISIONS ON THE MATERIALS YOU WANT TO USE. A LUMBER SIZING GUIDE IS INCLUDED ON SHEET 3.
   A. DECIDE ON THE SIZE OF YOUR DECK JOISTS.
   B. DECIDE ON THE NUMBER OF FOOTINGS.
   C. SIZE THE COMPONENTS:
      1. BEAM(S),
      2. JOISTS,
      3. DECK POSTS,
      4. FOOTINGS,
      5. DECK BOARDS,
      6. RAFTERS (IF APPLICABLE).

4. BASED ON YOUR DECISIONS IN STEP 3, SPECIFY THE LENGTH AND WIDTH DIMENSIONS OF YOUR DECK AND COMPLETE THE LIST OF MATERIALS ON THE DECK SPECIFICATION SHEET, SHEET 1.

5. FOR YOUR CONVENEINCE, WE HAVE PROVIDED TYPICAL CROSS-SECTION SKETCHES OF VARIOUS CONNECTIONS ON SHEET 4. USE THEM IF YOU PREFER, OR DESIGN YOUR OWN DETAILS AND PROVIDE YOUR SKETCHES.

6. DRAW A PLAN OF YOUR PROPERTY (REFERRED TO AS A "PLAT"). SKETCH YOUR HOUSE AND SHOW WHERE THE DECK IS INTENDED TO BE CONSTRUCTED. PROVIDE APPROXIMATE DIMENSIONS OF THE DECK TO YOUR PROPERTY LINES.

7. USE THE ATTACHED DETAILS FOR OTHER ASPECTS OF THE CONSTRUCTION.

LIST OF DRAWINGS IN THIS DECK GUIDE:

1. DECK SPECIFICATIONS
2. PORCH SPECIFICATIONS
3. MEMBER SIZING
4. CONNECTIONS
5. DETAILS
6. PICTURES

STANDARD ABBREVIATIONS

HDG - HOT DIPPED GALVANIZED (IN ACCORDANCE WITH ASTM A-153 OR B695, CLASS 55)
O.C. - ON CENTER
P.T. - PRESERATIVE TREATED
FT - FEET
IN - INCH

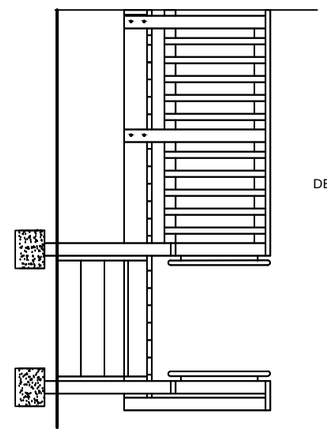

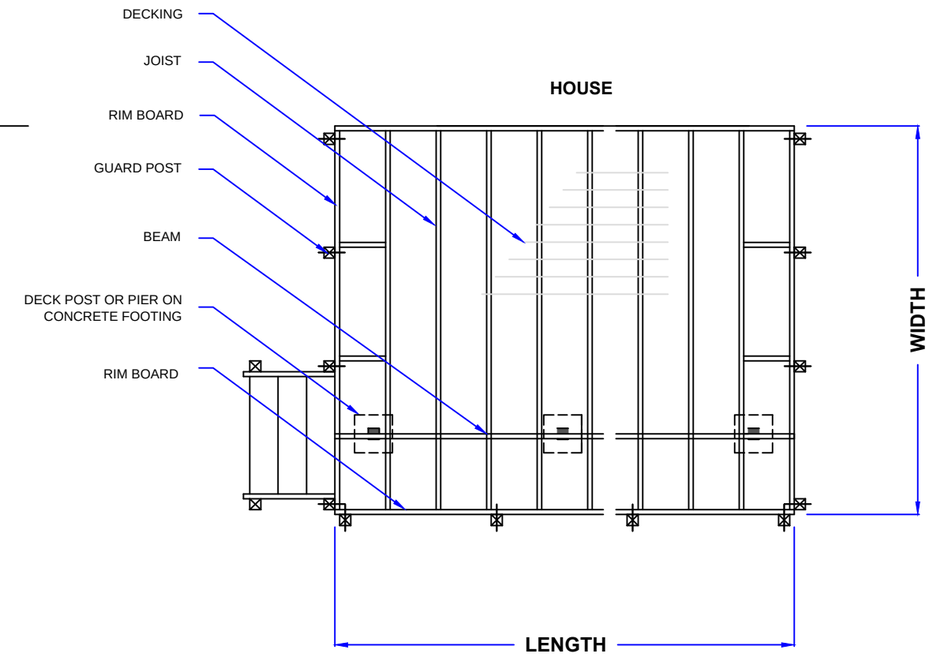

TYPICAL PLAN VIEW

HOUSE

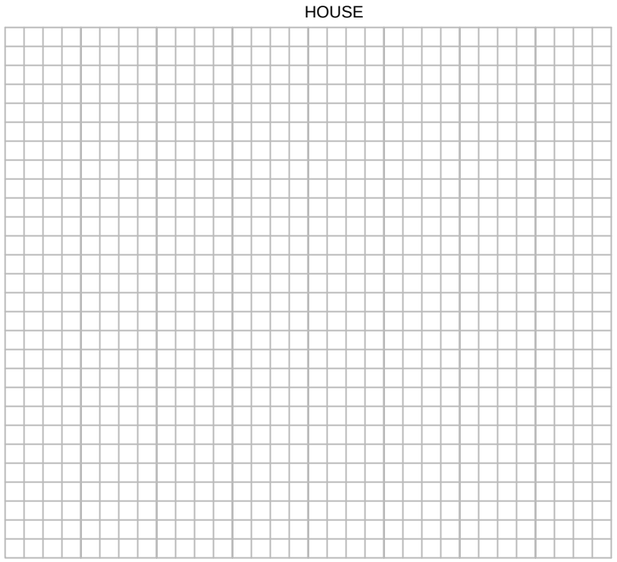

SKETCH YOUR DECK PLAN IN RELATIONSHIP TO THE HOUSE (IN REASONABLE SCALE).
SHOW HOW MANY AND APPROXIMATE LOCATION OF FOOTINGS YOU WILL BE USING.

PLAN VIEW

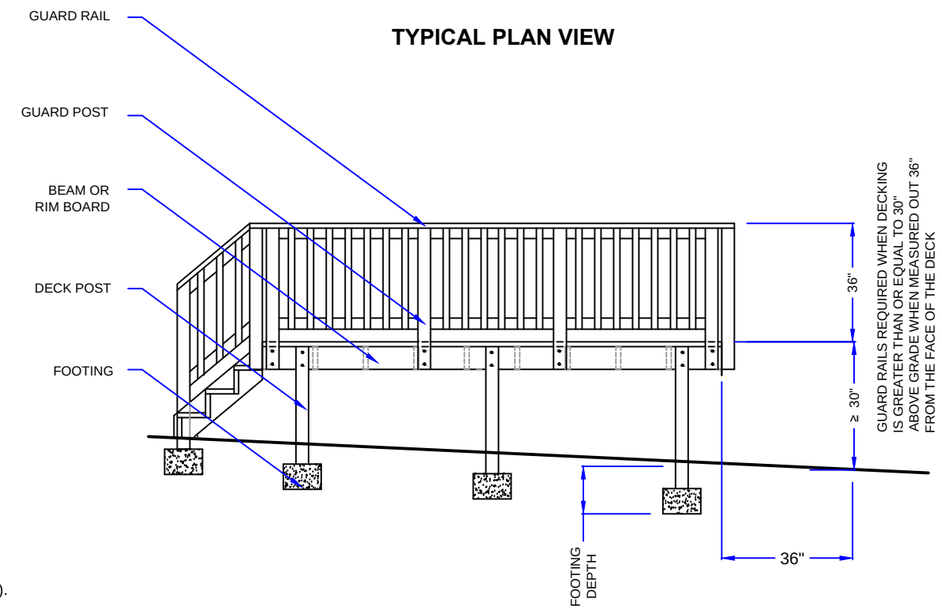

TYPICAL FRONT VIEW

DECK PLAN SPECIFICATIONS

Fill in all the blanks

		Example
OVERALL DIMENSIONS		
LENGTH	_____ FT	10 FT
WIDTH	_____ FT	8 FT
MAX. HEIGHT ABOVE GRADE (measured out 36" from deck - see picture on sheet 6)	_____ FT	3 FT
FREE STANDING (i.e. minimum of 2 beams)	_____ YES OR NO	YES
CANTILEVERED (0 IN means there is no cantilever)	_____ IN	24 IN
DECK POSTS		
DECK POST SIZE OR PIER SIZE (see sheet 3)	_____ x _____ IN	6 x 6 IN
DECK POST SPACING	_____ FT O.C.	5 FT O.C.
FOOTINGS		
FOOTING SIZE (see sheet 3)	_____ x _____ x _____ IN	12 x 12 x 8 IN
FOOTING DEPTH	_____ IN	18 IN
NUMBER OF FOOTINGS (including footings for stairs)	_____TOTAL	6 TOTAL
BEAMS		
BEAM SIZE (see sheet 3)	(_____) 2 x _____	(2) 2 x 8
END CONDITION AWAY FROM HOUSE (select one based on detail sheet 4)	_____ A,B,C,D or E	B
END CONDITION AT HOUSE (select one based on detail sheet 4)	_____ 1,2, or 3	2
JOISTS		
JOIST SIZE (see sheet 3)	2 x _____ @ ____ IN O.C.	2 X 8 @ 16" O.C.
DECKING		
DECKING BOARD SIZE 2X6, 5/4 BOARDS OR OTHER (see sheet 3)	_____	5/4 BOARDS

DECK SPECIFICATIONS

10/27//2015

SHED ROOF LAYING OVER HOUSE ROOF

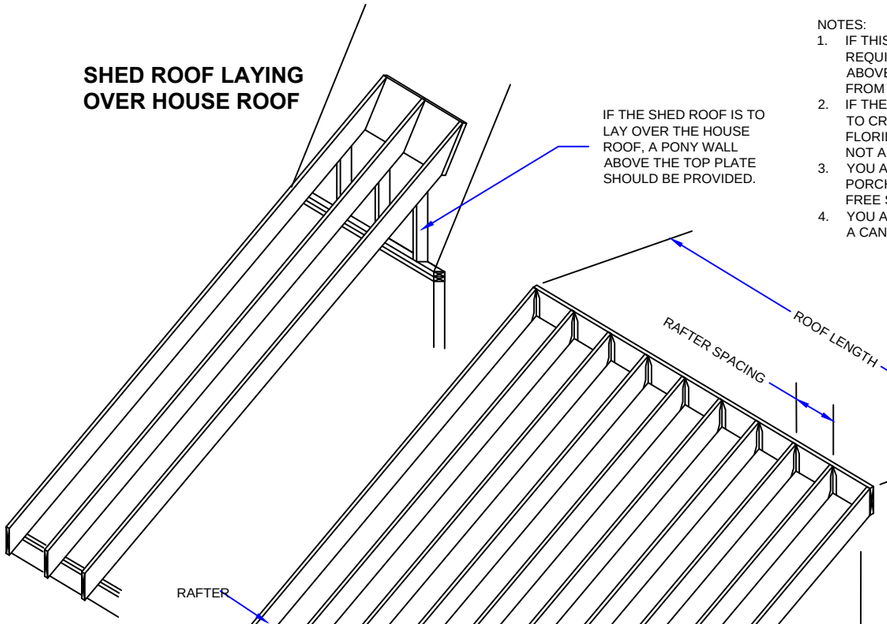

NOTES:

1. IF THIS IS A SCREEN PORCH, A GUARDRAIL WILL BE REQUIRED IF THE DECK IS GREATER THAN 30 INCHES ABOVE FINISHED GRADE - MEASURED AT 36 INCHES FROM THE FACE OF THE DECK.
2. IF THE PORCH IS TO BE ENCLOSED WITH SOLID WALLS TO CREATE A HABITABLE SPACE, SUNROOM OR FLORIDA ROOM, IT WILL BE CONSIDERED AN ADDITION, NOT A DECK OR PORCH.
3. YOU ARE NOT ALLOWED TO CONNECT A DECK OR PORCH TO A TRAILER OR MOBILE HOME. IT MUST BE FREE STANDING.
4. YOU ARE NOT ALLOWED TO ATTACH A SHED ROOF TO A CANTILEVERED WALL WITHOUT ENGINEER'S DESIGN.

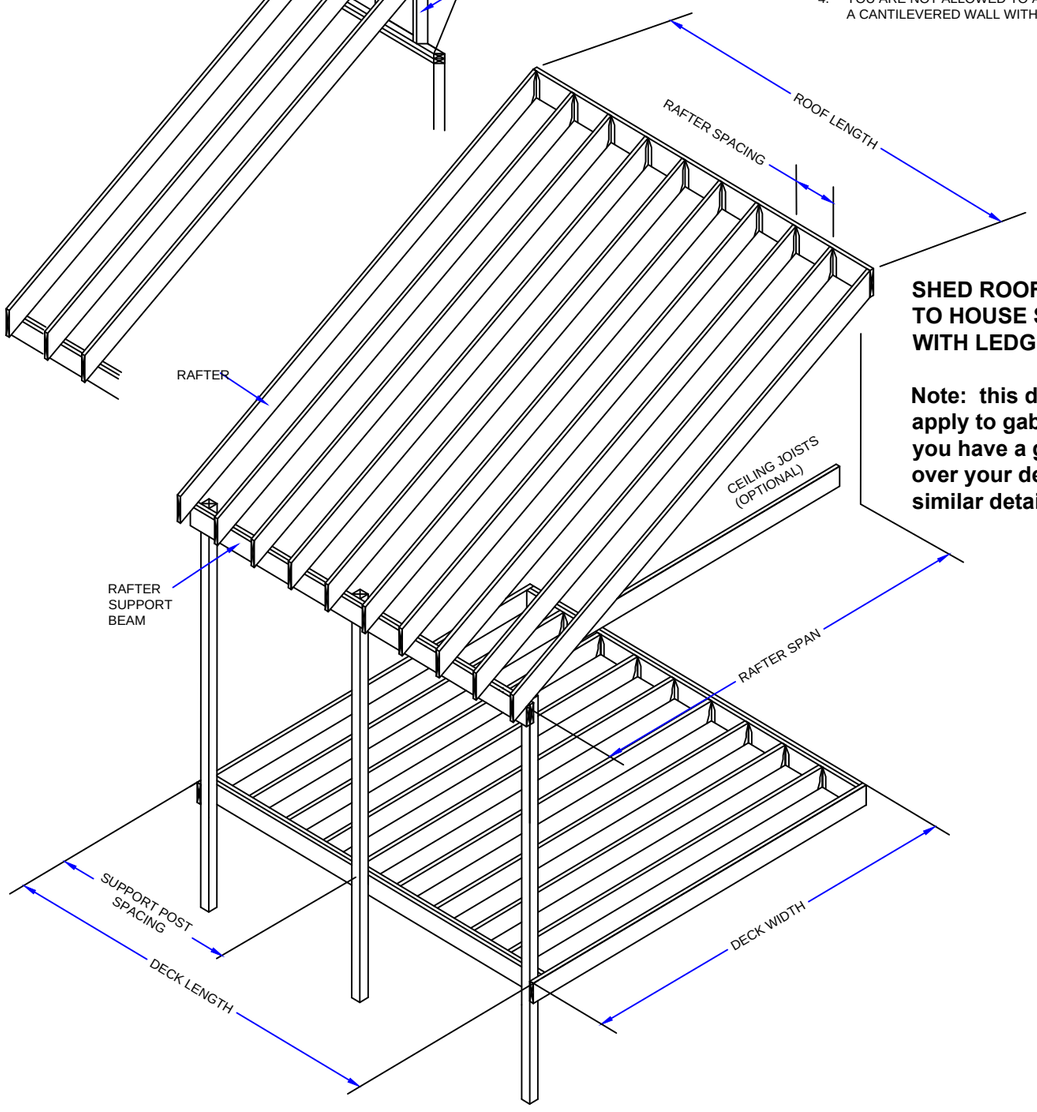

SHED ROOF ATTACHED TO HOUSE STUD WALLS WITH LEDGER

Note: this detail does not apply to gable end roof. If you have a gable roof over your deck, provide similar details.

MINIMUM RAFTER SUPPORT BEAM

POST SPACING (FT)	RAFTER SPAN (FT)					
	6	8	10	12	14	16
4	(1) 2X6	(1) 2X6	(1) 2X6	(1) 2X6	(1) 2X6	(1) 2X6
5	(1) 2X6	(1) 2X6	(1) 2X6	(1) 2X6	(1) 2X6	(1) 2X8 or (2) 2x6
6	(1) 2X6	(1) 2X6	(1) 2X6	(1) 2X8 or (2) 2x6	(1) 2X8 or (2) 2x6	(1) 2X8 or (2) 2x6
7	(1) 2X6	(1) 2X8 or (2) 2x6	(1) 2X8 or (2) 2x6	(1) 2X8 or (2) 2x6	(1) 2X10 or (2) 2x8	(1) 2X10 or (2) 2x8
8	(1) 2X8 or (2) 2x6	(1) 2X8 or (2) 2x6	(1) 2X10 or (2) 2x6	(1) 2X10 or (2) 2x8	(1) 2X12 or (2) 2x8	(1) 2X12 or (2) 2x8
9	(1) 2X8 or (2) 2x6	(1) 2X10 or (2) 2x6	(1) 2X10 or (2) 2x8	(1) 2X12 or (2) 2x8	(1) 2X12 or (2) 2x8	(2) 2X10
10	(1) 2X8 or (2) 2x6	(1) 2X10 or (2) 2x8	(1) 2X12 or (2) 2x8	(2) 2X8	(2) 2X10	(2) 2X10
11	(1) 2X10 or (2) 2x6	(1) 2X12 or (2) 2x8	(2) 2X10	(2) 2X10	(2) 2X10	(2) 2X12
12	(1) 2X12 or (2) 2x8	(1) 2X12 or (2) 2x8	(2) 2X10	(2) 2X12	(2) 2X12	(2) 2X12

MAXIMUM RAFTER SPANS (a) (b)

SIZE	RAFTER SPACING (o.c.)	MAXIMUM RAFTER SPANS WITH CEILING JOISTS	MAXIMUM RAFTER SPANS WITHOUT CEILING JOISTS
2X4	12"	9'-5"	10'-4"
	16"	8'-7"	9'-0"
	24"	7'-4"	7'-4"
2X6	12"	14-9"	15'-7"
	16"	13'-5"	13'-6"
	24"	11'-0"	11'-0"
2X8	12"	19-6"	19-8"
	16"	17'-1"	17'-1"
	24"	13'-11"	13'-11"
2X10	12"	23-5"	23-5"
	16"	20'-3"	20'-3"
	24"	16'-6"	16'-6"
2X12	12"	>26'-0"	>26'-0"
	16"	23'-10"	23'-10"
	24"	19'-6"	19'-6"

(a) BASED ON 2012 VA-IRC SPAN TABLES FOR SOUTHERN PINE #2. FOR OTHER SPECIES, REFER TO THE CODE BOOK.
(b) ASSUMES 20 PSF GROUND SNOW LOAD AND 10 PSF DEAD LOAD.

PORCH (ROOF) SPECIFICATIONS

IF APPLICABLE - Fill in all the blanks

ARE YOU CONSTRUCTING A PORCH ON NEW FOOTINGS?

_____ YES _____ NO

ARE YOU ADDING A ROOF TO AN EXISTING DECK?

_____ YES _____ NO

WILL IT BE A SCREENED PORCH?

_____ YES _____ NO

PORCH (ROOF) SPECIFICATIONS

(IF APPLICABLE)

PORCH ROOF SIZE BEING BUILT

ROOF LENGTH _____ **FT**

ROOF SPAN _____ **FT**

ROOF SLOPE _____ : _____ **(example 4:12)**

ROOF SUPPORT POSTS

POST SIZE _____ X _____

POST SPACING _____ FT
(IF THEY ARE NOT ALIGNED WITH FOOTINGS)

RAFTER SUPPORT BEAM

SIZE (_____) _____ X _____

RAFTERS

SIZE 2 x _____ @ ____ IN O.C.

PORCH SPECIFICATIONS

10/27/2015

JOISTS

THE SPAN OF THE JOIST IS MEASURED FROM THE CENTERLINE OF BEARING AT ONE END OF THE JOIST(i.e. TYPICALLY THE CENTERLINE OF THE POST) TO THE CENTERLINE OF BEARING AT THE OTHER END OF THE JOIST, AND DOES NOT INCLUDE THE LENGTH OF THE OVERHANGS (CANTILEVERS).

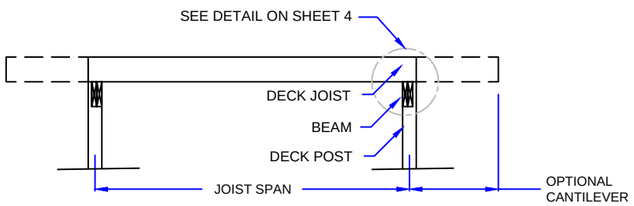

MAXIMUM JOIST SPAN (a) (c)

SIZE	12" O.C.		16" O.C.		24" O.C.	
	MAXIMUM SPAN	MAXIMUM CANTILEVER (b)	MAXIMUM SPAN	MAXIMUM CANTILEVER (b)	MAXIMUM SPAN	MAXIMUM CANTILEVER (b)
2X6	9'-11"	1'-3"	9'-0"	1'-4"	7'-7"	1'-6"
2X8	13'-1"	2'-1"	11'-10"	2'-3"	9'-8"	2'-5"
2X10	16'-2"	3'-4"	14'-0"	3'-6"	11'-5"	2'-10"
2X12	18'-0"	4'-6"	16'-6"	4'-2"	13'-6"	3'-4"

(a) BASED ON THE 2012 VA-IRC TABLE R507.5 FOR SOUTHERN PINE #2.
FOR OTHER SPECIES, REFER TO TABLE.
ALL LUMBER IS ASSUMED TO BE P.T. INCLUDING HOUSE BAND BOARDS THAT SUPPORT AN ATTACHED DECK.
(b) CANTILEVER LENGTH IS BASED ON JOIST SPAN ÷ 4 OR DEFLECTION, WHICHEVER IS SHORTER.
(c) BASED ON 40 PSF LIVE LOAD AND 10 PSF DEAL LOAD.

DECKING BOARDS

1. DECKING BOARDS ARE TYPICALLY 2x6, 5/4 P.T. BOARDS, OR MANUFACTURED OF COMPOSITE MATERIAL.
2. ATTACH DECKING BOARDS TO DECK JOISTS WITH 2-8d HDG NAILS, (2) #8 HDG SCREWS, OR PROPRIETARY FASTENERS INTENDED FOR P.T. WOOD.
3. DECK BOARDS SHALL BE SPACED APPROXIMATELY 1/8" APART (EDGE TO EDGE).
4. DECKING MAY BE APPLIED DIAGONALLY. 2x6 WITH JOISTS AT MAXIMUM 16" O.C. OR 5/4 BOARDS WITH JOISTS AT MAXIMUM 12" O.C..
5. EACH PIECE OF DECKING MUST BEAR ON AT LEAST 3 JOISTS.

DECK POSTS

1. DECK POSTS MAY BE EITHER P.T. WOOD, OR NATURAL DECAY RESISTANT WOOD OR MASONRY.
2. WOOD DECK POSTS SHALL BE PRESERVATIVE TREATED AND CONSTRUCTED WITH HOT DIPPED GALVANIZED FASTENERS, NAILS, BRACKETS, ETC..
4. DECK POSTS THAT ARE OVER 8' IN HEIGHT SHOULD BE CROSS BRACED IN BOTH DIRECTIONS.

MAXIMUM DECK POST HEIGHT

DECK POST SIZE	ATTACHED DECK	FREE STANDING DECK
4 x 4	8' - 0"	5' - 0"
4 x 6	10' - 0"	8' - 0"
6 x 6	14' - 0"	10' - 0"

BEAMS

1. BEAMS SUPPORT THE DECK JOISTS. THE JOISTS EITHER BEAR ON TOP OF THE BEAM FOR A CANTILEVER DESIGN, OR ARE HUNG FLUSH ALONG SIDE IT WITH MECHANICAL HANGERS.
2. TWO OR THREE MEMBERS MAY BE CONNECTED TOGETHER TO FORM THE BEAM USING 10-d HDG NAILS OR #10 HDG SCREWS, STAGGERED IN TWO ROWS, AT 16" O.C.
3. WHENEVER FOUR OR MORE MEMBERS ARE USED, THEY SHOULD BE BOLTED TOGETHER WITH 1/2" DIA HDG THRU-BOLTS AT 24" O.C.

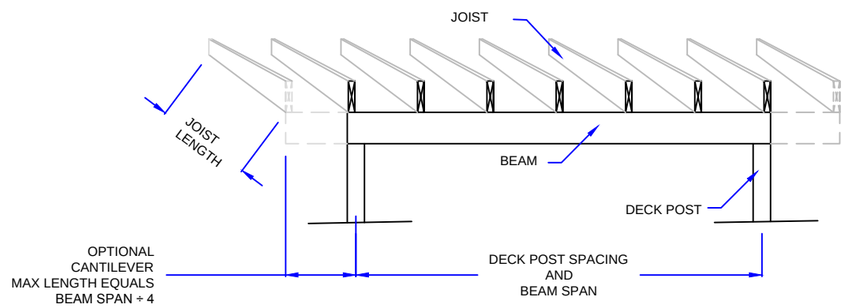

MINIMUM BEAM SIZE (a), (b)

JOIST LENGTH	DECK POST SPACING AND BEAM SPAN							
	6 FT BEAM SPAN		8 FT BEAM SPAN		10 FT BEAM SPAN		12 FT BEAM SPAN	
	SIMPLE DECK (c)	COMPLEX DECK (d)	SIMPLE DECK (c)	COMPLEX DECK (d)	SIMPLE DECK (c)	COMPLEX DECK (d)	SIMPLE DECK (c)	COMPLEX DECK (d)
6 FT JOIST SPAN	(1) 2X8	(1) 2X8	(1) 2X10 or (2) 2X8	(1) 2X12 or (2) 2X8	(1) 2X12 or (2) 2X10 or (3) 2X8	(1) 2X12 or (2) 2X10 or (3) 2X8	(2) 2X10 or (3) 2X8	(2) 2X12 or (3) 2X8
8 FT JOIST SPAN	(1) 2X8	(1) 2X10 or (2) 2X8	(1) 2X12 or (2) 2X8	(1) 2X12 or (2) 2X10	(2) 2X10 or (3) 2X8	(2) 2X12 or (3) 2X8	(2) 2X12 or (3) 2X10	(3) 2X10
10 FT JOIST SPAN	(1) 2X10 or (2) 2X8	(1) 2X10 or (2) 2X8	(2) 2X8	(2) 2X10 or (3) 2X8	(2) 2X12 or (3) 2X8	(2) 2X12 or (3) 2X10	(3) 2X10	(3) 2X12
12 FT JOIST SPAN	(1) 2X10 or (2) 2X8	(1) 2X12 or (2) 2X8	(2) 2X10 or (3) 2X8	(2) 2X12 or (3) 2X8	(2) 2X12 or (3) 2X10	(3) 2X10	(3) 2X12	(3) 2X12
14 FT JOIST SPAN	(1) 2X12 OR (2) 2X8	(2) 2X8	(2) 2X10 OR (3) 2X8	(3) 2X12	(3) 2X10	(3) 2X12	(3) 2X12	DESIGN REQUIRED
16 FT JOIST SPAN	(1) 2X12 OR (2) 2X8	(2) 2X10 OR (3) 2X8	(2) 2X12 OR (3) 2X8	(3) 2X10	(3) 2X12	(3) 2X12	DESIGN REQUIRED	DESIGN REQUIRED
18 FT JOIST SPAN	(2) 2X10 OR (3) 2X8	(2) 2X10 OR (3) 2X8	(2) 2X12 OR (3) 2X10	(3) 2X10	(3) 2X12	DESIGN REQUIRED	DESIGN REQUIRED	DESIGN REQUIRED

(a) BASED ON THE 2012 VA-IRC FOR SOUTHERN PINE #2, DOUGLAS FIR LARCH #2, HEM FIR #2, SPF #2, REDWOOD #2. FOR OTHER SPECIES OF MATERIALS, REFER TO SPECIES SPECIFIC DATA. ASSUMES 40 PSF LIVE LOAD, 10 PSF DEAD LOAD, WET SERVICE FACTOR AND P.T...
(b) BEAM DEPTH MUST BE EQUAL TO OR GREATER THAN THE JOIST DEPTH IF JOIST HANGERS ARE USED.
(c) SIMPLE DECK - A DECK WITHOUT JOIST CANTILEVERS AND WITHOUT BEAM CANTILEVERS. THE DECK JOISTS ARE SUPPORTED ON THE PERIMETER BEAM AND LEDGER ONLY.
(d) COMPLEX DECK - A DECK WITH JOIST CANTILEVER(S) AND/OR BEAM CANTILEVER(S) OR DECK JOISTS ARE SUPPORTED WITH 3-POINT BEARING. CANTILEVER LENGTH IS BASED ON JOIST SPAN ÷ 4 AND BEAM SPAN ÷ 4.

FOOTINGS

ALL FOOTINGS SHALL BEAR ON UNDISTURBED SOIL AT 18" - 20" BELOW FINISHED GRADE. IF THE FOOTING IS WITHIN 4 FEET OF THE EXISTING HOUSE, IT SHALL BE AT LEAST AS DEEP AS THE HOUSE FOOTING.

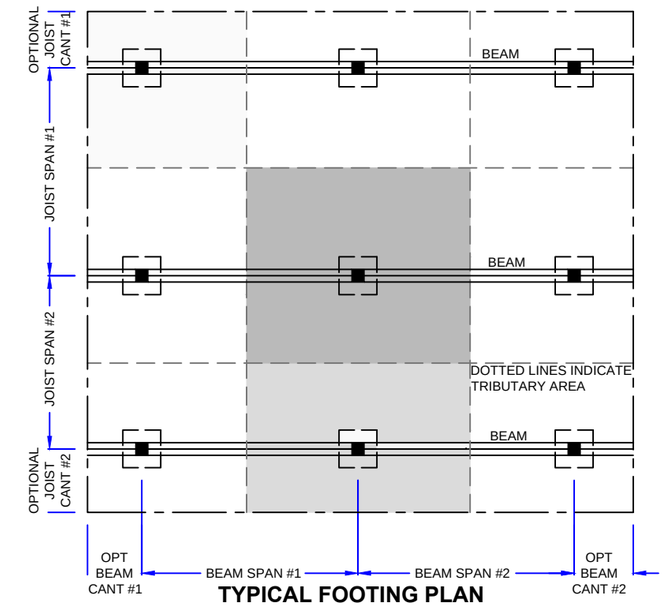

TYPICAL FOOTING PLAN

FOOTING SIZE (a) (c) (d)

TRIBUTARY AREA (b) (SQFT)	SQUARE FOOTING SIDE DIMENSION (INCHES)	ROUND FOOTING DIAMETER (INCHES)	THICKNESS (INCHES)
20	12	14	8
30	12	14	8
40	14	16	8
50	16	18	8
60	17	19	8
70	18	20	8
80	20	22	8
100	22	25	8
120	24	27	9
140	26	29	10
160	28	31	11

(a) ASSUMES 1500 PSF SOIL BEARING CAPACITY
(b) *TRIBUTARY AREA* IS DEFINED AS THE AREA INSCRIBED BY ONE-HALF THE LENGTH OF THE SPANS ADJACENT TO ALL FOUR SIDES SURROUNDING THE POST.

TRIBUTARY AREA =
[(1/2 JOIST SPAN #1 + JOIST CANT #1) + (1/2 JOIST SPAN #2 + JOIST CANT #2)] X
[(1/2 BEAM SPAN #1 + BEAM CANT #1) + (1/2 BEAM SPAN #2 + BEAM CANT #2)]

(c) THE FOOTING SIZES IN THIS TABLE ASSUME NO ROOF LOAD. IF THE FOOTING SUPPORTS A PORCH ROOF, ADD 4" TO THE DIMENSION IN THIS TABLE.
(d) INTERPOLATION IS PERMITTED.

MEMBER SIZING

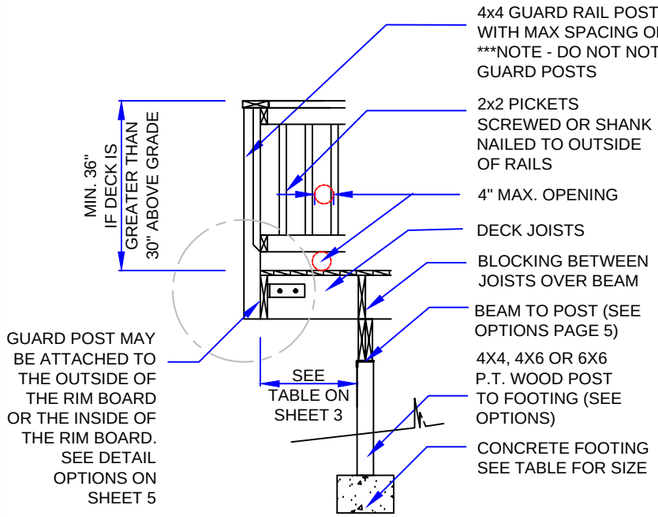

CANTILEVER DECK BEAM BELOW JOISTS

A

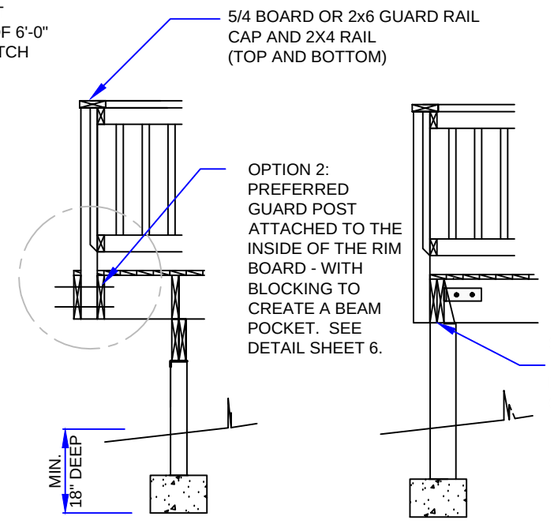

CANTILEVER DECK BEAM BELOW JOISTS

B

OFFSET POST BEAM FLUSH WITH JOISTS

C

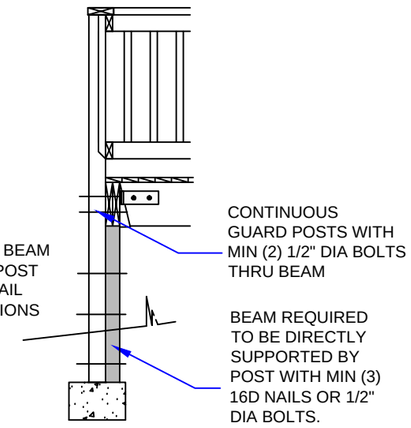

CONTINUOUS POST BEAM FLUSH WITH JOISTS

D

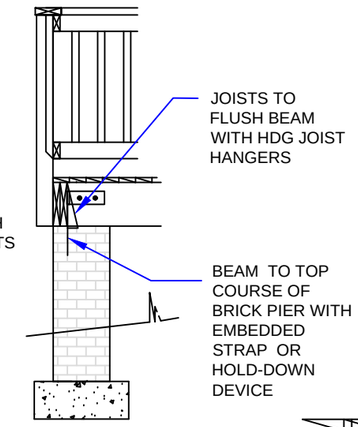

MASONRY PIER BEAM FLUSH WITH JOISTS

E

END AWAY FROM THE HOUSE - GUARD POST OUTSIDE RIM BOARD

NOTE: DO NOT NOTCH THE GUARD POST.

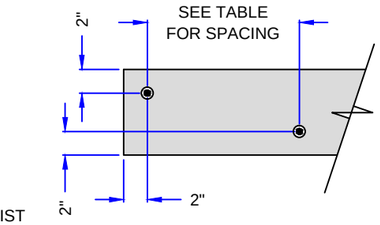

LEDGER BOARD

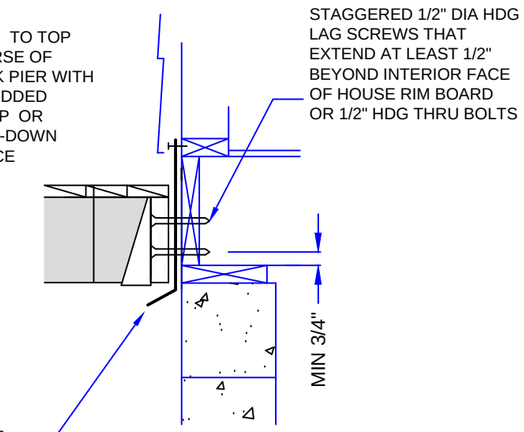

(1) PIECE OF CORRISION-RESISTANT MINIMUM 19 GA METAL OR APPROVED NON-METALIC FLASHING BETWEEN HOUSE RIM BOARD AND DECK LEDGER BOARD

NOTE: ALUMINUM FLASHING IS NOT PERMITTED.

LEDGER CONNECTION

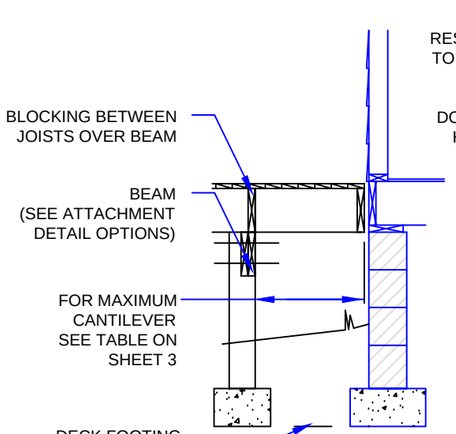

CANTILEVER DECK BEAM BELOW JOISTS (FREE STANDING DECK)

1

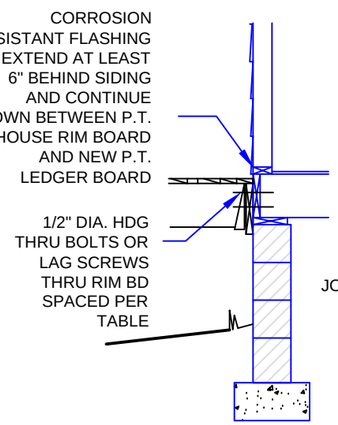

ATTACHMENT OF DECK TO HOUSE RIM BOARD

2

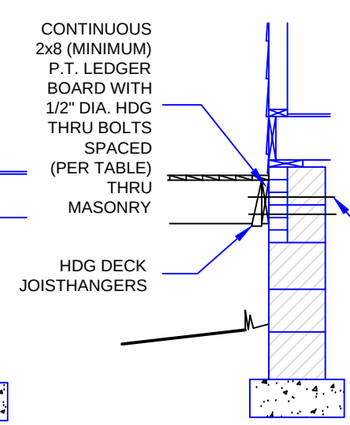

ATTACHMENT OF DECK TO MASONRY COMPOSITE FOUNDATION WALL

3

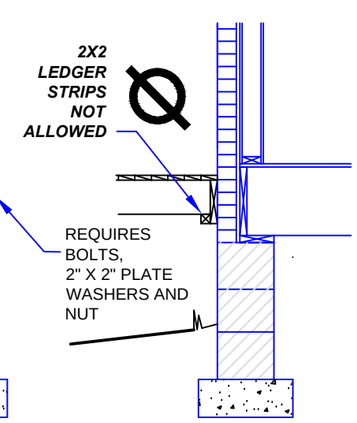

ATTACHMENT OF DECK TO MASONRY VENEER NOT ALLOWED

END ADJACENT TO THE HOUSE

NOTE: 2X2 LEDGER STRIPS NOT ALLOWED

LEDGER BOARD CONNECTION TO HOUSE

ON-CENTER SPACING FOR FASTENERS ATTACHING DECK TO HOUSE							
JOIST SPAN (ft)	6' and less	6'-1" 8'-0"	8'-1" 10'-0"	10'-1" 12'-0"	12'-1" 14'-0"	14'-1" 16'-0"	16'-1" 18'-0"
1/2" x 4" LAG SCREWS	30"	23"	18"	15"	13"	11"	10"
1/2" x 4" BOLTS WITH WASHERS AND NUTS	36"	36"	34"	29"	24"	21"	19"

NOTES:

1. THE MAXIMUM GAP BETWEEN THE FACE OF THE LEDGER BOARD AND FACE OF THE HOUSE BAND JOIST SHALL BE 1/2".
2. THE TIP OF THE LAG SCREW SHALL FULLY EXTEND BEYOND THE INSIDE OF THE BAND JOIST (BOARD).
3. LEDGERS SHALL BE FLASHED TO PREVENT WATER FROM CONTACTING THE HOUSE BAND JOIST (BOARD).
4. LAG SCREWS AND BOLTS SHALL BE STAGGERED AND SHALL NOT BE CLOSER THAN 2" TO THE TOP AND BOTTOM OF THE LEDGER.
5. DECK LEDGERS SHALL BE 2X8 PRESERVATIVE TREATED SOUTHERN PINE (MINIMUM) OR OTHER APPROVED METHOD AND MATERIAL AS ESTABLISHED BY STANDARD ENGINEERING PRACTICE.

CONNECTIONS

10/27/2015

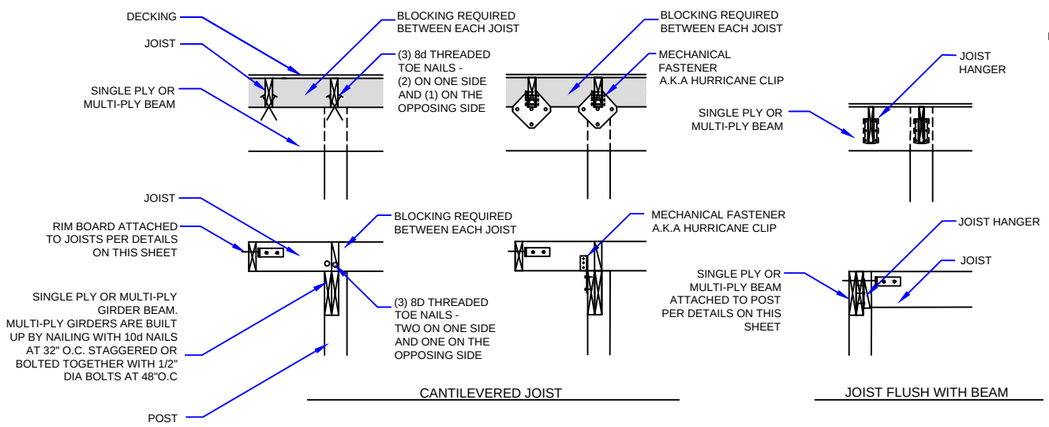

TYPICAL JOISTS TO BEAM CONNECTION OPTIONS

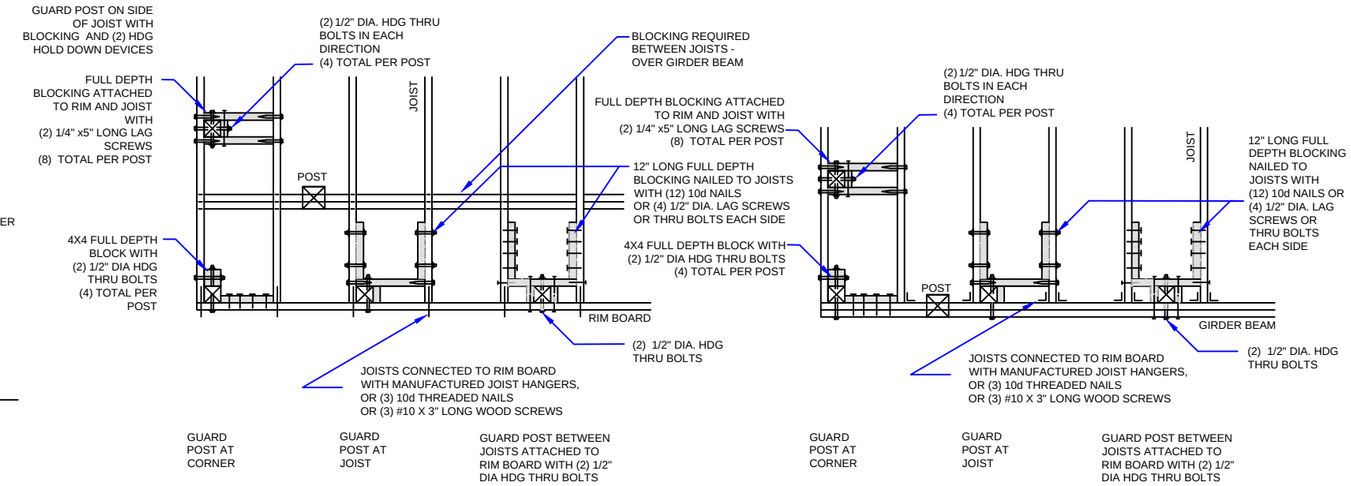

TYPICAL GUARD POST INTERIOR OF RIM BOARD ON CANTILEVERED DECK

TYPICAL GUARD POST INTERIOR OF GIRDER BEAM

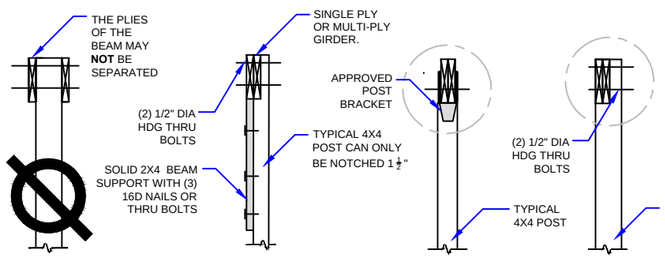

TYPICAL BEAM TO POST CONNECTION OPTIONS

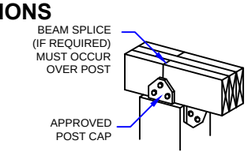

BEAM SPLICE OVER POST CAP

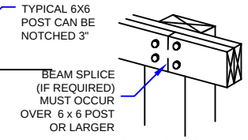

BEAM SPLICE OVER POST

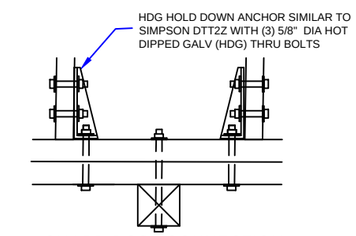

GUARD POST CONNECTION ENLARGED VIEW

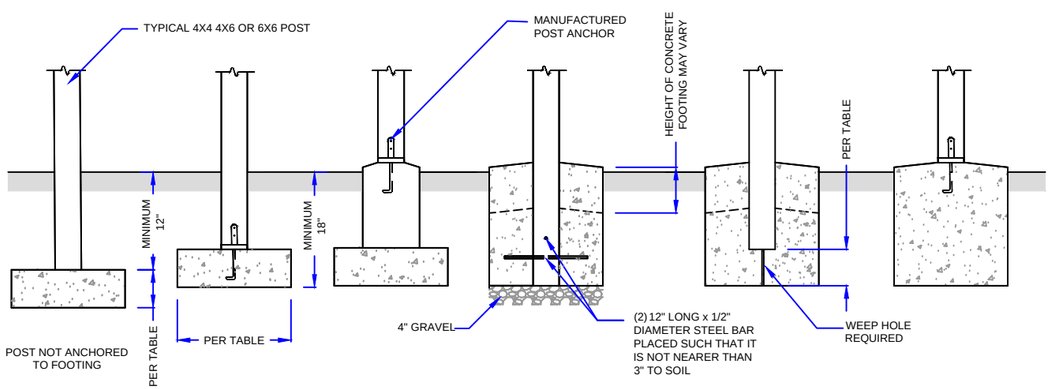

TYPICAL FOOTING OPTIONS

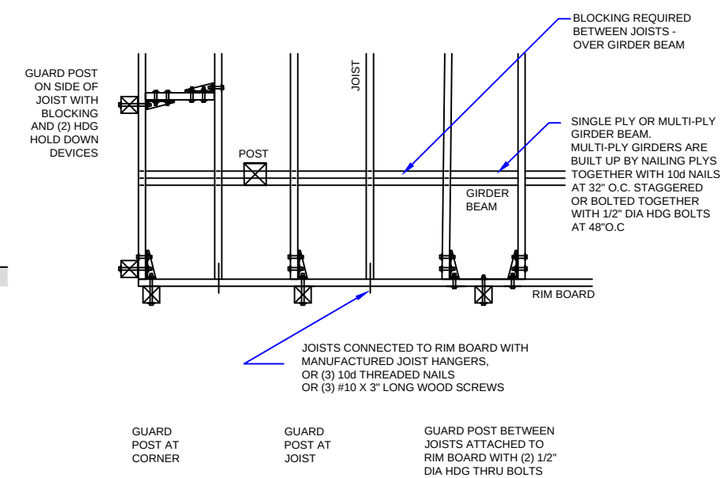

TYPICAL GUARD POST EXTERIOR OF RIM BOARD ON CANTILEVERED DECK

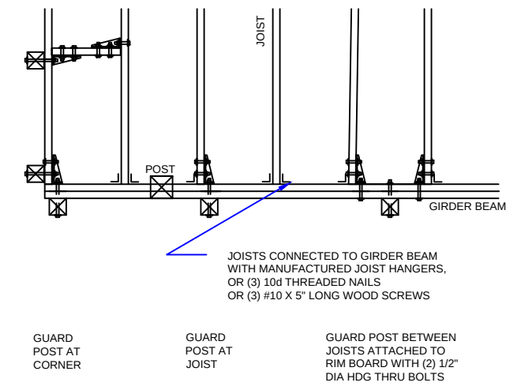

TYPICAL GUARD POST EXTERIOR OF GIRDER BEAM

CONNECTION DETAILS

10/27/2015

STAIRS AND RAMPS

STAIR RISERS:
1. THE MAXIMUM RISER HEIGHT IS 8-1/4". THE MAXIMUM VARIATION BETWEEN THE TALLEST AND SHORTEST RISER IS 3/8".
2. OPEN RISERS ARE ALLOWED AS LONG AS THE OPENINGS DO NOT EXCEED 4"

STAIR TREADS
1. THE MINIMUM TREAD WIDTH IS 9". THE MAXIMUM VARIATION IN TREAD WIDTHS BETWEEN THE WIDEST AND NARROWEST IS 3/8".
2. THE TREAD NOSING SHALL PROJECT AT LEAST 3/4" AND NOT MORE THAN 1-1/4" BEYOND ANY SOLID RISER.

STRINGERS
1. ALL STRINGERS SHALL BE A MINIMUM OF 2x12 P.T. MATERIAL.
2. IF THE STRINGER IS FABRICATED BY CUTTING NOTCHES FOR THE RISERS AND TREADS, THREE STRINGERS SHALL BE PROVIDED FOR A 36" WIDE STAIR. NOTE: DO NOT OVER CUT NOTCHES.
   IF THE STRINGER IS FABRICATED FROM UNCUT 2x12, TWO STRINGERS ARE REQUIRED FOR A 36" WIDE STAIR.
3. STRINGERS SHALL NOT SPAN MORE THAN THE THE DIMENSIONS SHOWN, OTHERWISE, AN INTERMEDIATE POST IS REQUIRED. THE POST SHALL BE SUPPORTED ON A CONCRETE FOOTING AT LEAST 12" DEEP. THE STRINGER SHALL BE ATTACHED TO THE POST WITH (2) 1/2" DIA HDG THRU BOLTS.

GUARDRAILS (FREQUENTLY REFERRED TO AS "GUARDS")
1. GUARDRAILS ARE AN ASSEMBLY COMPRISED OF THE FOLLOWING COMPONENTS:
   - A GUARDRAIL CAP, TYPICALLY A 2X6 OR 5/4 BOARD LAID FLAT
   - TOP AND BOTTOM RAILS TO WHICH THE PICKETS ARE ATTACHED,
   - (GUARD) POSTS, AND
   - PICKETS.
2. GUARDRAILS ARE REQUIRED WHERE THE DISTANCE FROM THE WALKING SURFACE TO GRADE IS MORE THAN 30" MEASURED OUT 36" FROM THE FACE OF THE DECK.
3. THE TOP OF THE GUARDRAIL CAP MUST BE BETWEEN 34" AND 38"WHERE MEASURED FROM THE NOSING OF THE TREAD.
4. THE BOTTOM RAIL MUST BE LOCATED SO THAT A 6" SPHERE CANNOT PASS BETWEEN THE TRIANGLE FORMED BY THE RISER, TREAD AND BOTTOM RAIL.
5. THE GUARDS SHALL BE ABLE TO WITHSTAND A LOADING OF 200# IN ANY DIRECTION.

HANDRAILS (NOT TO BE CONFUSED WITH GUARDRAILS)
1. A HANDRAIL (TYPE 1 OR TYPE 2 PROFILE) IS REQUIRED ON AT LEAST ONE SIDE OF THE STAIR WHEN THERE ARE MORE THAN THREE RISERS.
2. THE HANDRAIL SHOULD BE MOUNTED BETWEEN 34" AND 38" ABOVE THE NOSING OF THE TREAD.
3. HANDRAILS HAVE TO "RETURN" TO THE POST OR WALL.

FOOTINGS
1. THE POST AT THE BOTTOM OF THE STRINGER MUST BE SET ON A CONCRETE FOOTING AT LEAST 18" IN DEPTH.

CONNECTIONS
1. THE BOTTOM OF P.T. STRINGERS SHALL BE ATTACHED TO EACH P.T. POST WITH (2) 1/2" DIA. HDG THRU BOLTS.
2. THE TOP OF P.T. STRINGERS SHALL BE ATTACHED WITH HDG MECHANICAL FASTENERS AND HDG THRU BOLTS TO EITHER:
   - A P.T. POST EMBEDDED IN THE GROUND ON A FOOTING (PREFERRED),
   - A SAW CUT POST,
   - A RIM BOARD WITH MECHANICAL FASTENERS (BUT END NAILING IS PROHIBITED).
   - OR DECK JOIST.

STAIR LANDINGS
1. WHEN A STAIRWAY EXCEEDS A VERTICAL HEIGHT OF 12', AN INTERMEDIATE LANDING SHALL BE PROVIDED.
2. LANDINGS SHALL BE AS WIDE AS THE STAIR WIDTH IT SERVICES (TYPICALLY 36").

RAMPS
1. RAMPS MAY BE STRAIGHT RUNS OR "L" OR "U" SHAPED.
2. RAMPS SHALL HAVE A MAXIMUM SLOPE OF 1:12
   (THAT MEANS FOR EVERY INCH IN HEIGHT THE RAMP HAS TO CLIMB, IT SHALL BE ONE FOOT LONG).
3. WHERE RAMPS CHANGE DIRECTIONS, A LEVEL LANDING THE WIDTH OF THE RAMP IS REQUIRED.
4. HANDRAILS ARE REQUIRED ON AT LEAST ONE SIDE OF RAMP, AND MAY BE ATTACHED TO THE HOUSE
5. GUARDRAILS ARE REQUIRED WHERE THE HEIGHT OF THE RAMP ABOVE GRADE EXCEEDS 30."

HANDRAIL PROFILES

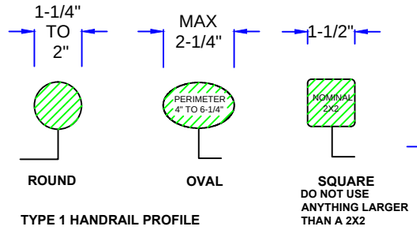

TYPE 1 HANDRAIL PROFILE

HANDRAILS WITH A CIRCULAR CROSS-SECTION SHALL HAVE AN OUTSIDE DIAMETER OF AT LEAST 1-1/4" AND NOT GREATER THAN 2". IF THE HANDRAIL IS NOT CIRCULAR, IT SHALL HAVE A PERIMETER OF AT LEAST 4" AND NOT GREATER THAN 6-1/4" WITH A MAXIMUM CROSS SECTION OF 2-1/4"

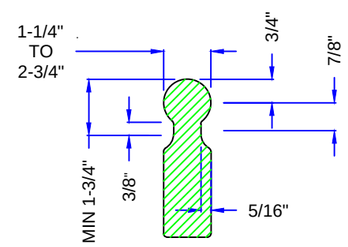

RECTANGULAR

TYPE 2 HANDRAIL PROFILE

HANDRAILS WITH A PERIMETER GREATER THAN 6-1/4" SHALL PROVIDE A GRASPABLE FINGER RECESS ON BOTH SIDES OF THE PROFILE. THE FINGER RECESS SHALL:
1. BEGIN WITHIN A DISTANCE OF 3/4" MEASURED VERTICALLY FROM THE TALLEST PORTION OF THE PROFILE AND
2. ACHIEVE A DEPTH OF AT LEAST 5/16" WITHIN 7/8" BELOW THE WIDEST PORTION OF THE PROFILE. THE REQUIRED DEPTH SHALL CONTINUE FOR AT LEAST 3/8" TO A LEVEL THAT IS NOT LESS THAN 1-3/4" BELOW THE TALLEST PORTION OF THE PROFILE. THE MINIMUM WIDTH OF THE HANDRAIL ABOVE THE RECESS SHALL BE 1-1/4" TO A MAXIMUM OF 2-3/4" EDGES SHALL HAVE A MINIMUM RADIUS OF .01"

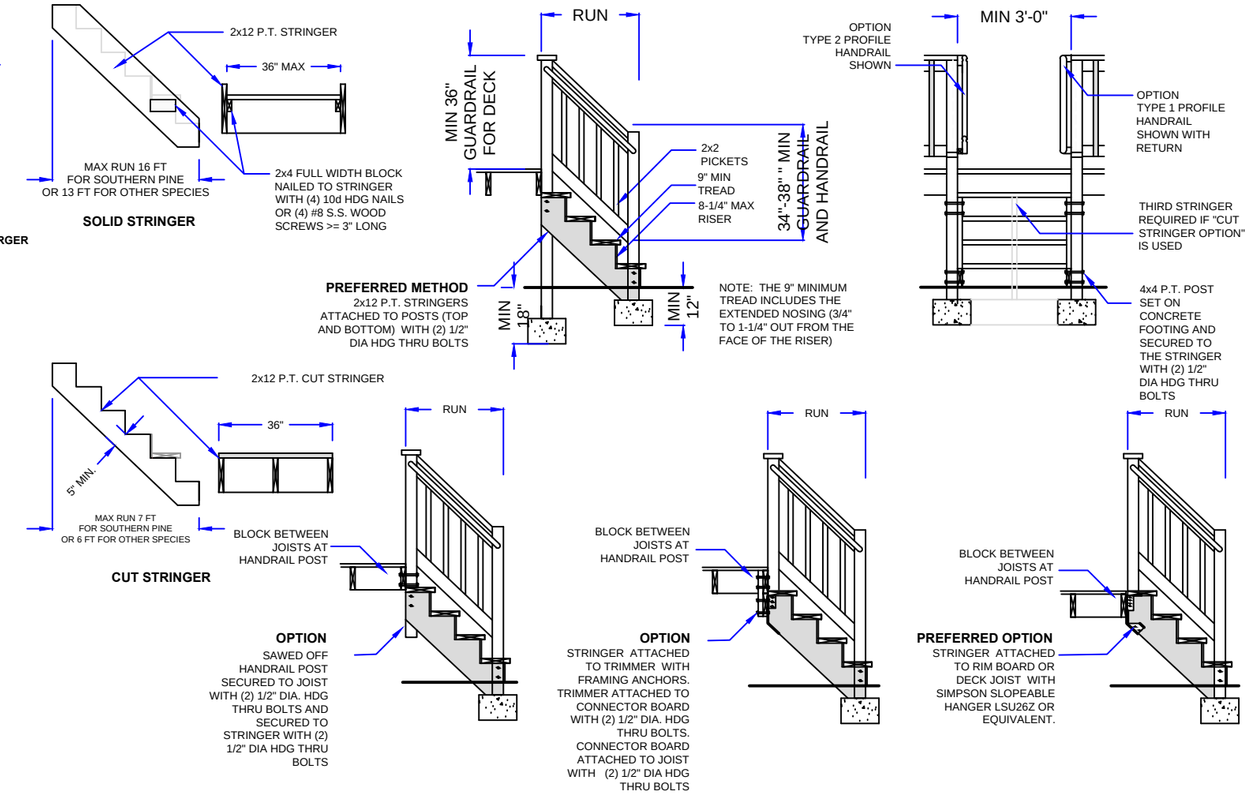

STAIR DETAILS

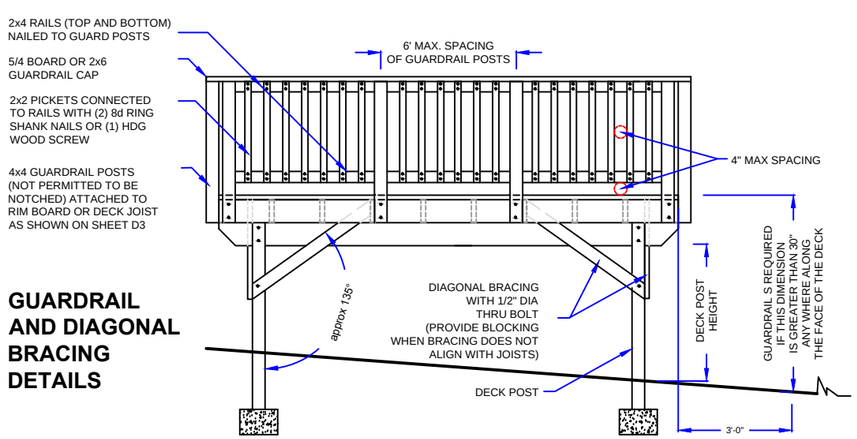

GUARDRAIL AND DIAGONAL BRACING DETAILS

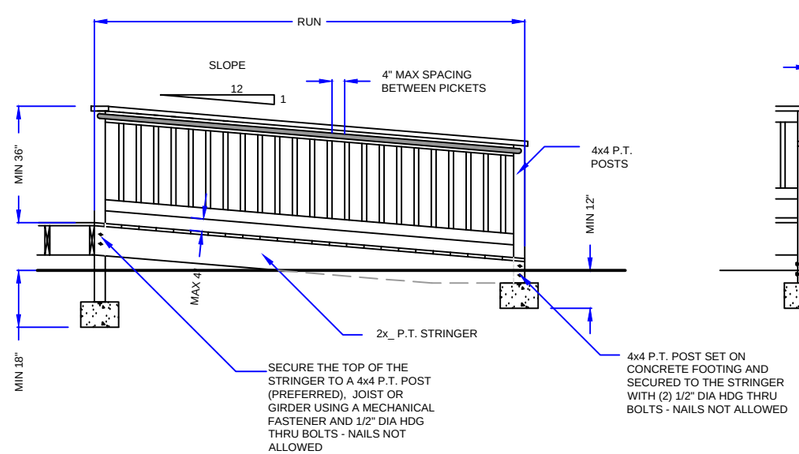

RAMP DETAILS

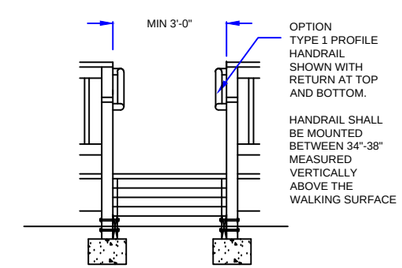

RAMP STRINGER DESIGN

RUN LENGTH	MATERIAL	NUMBER OF SUPPORTS
0 FT - 12 FT	(2) 2x8	SUPPORT TOP AND BOTOM
12 FT- 16 FT	(2) 2x10	SUPPORT TOP AND BOTTOM
16 FT - 19 FT	(2) 2x12	SUPPORT TOP AND BOTTOM
OVER 19 FT	na	ADD INTERMEDIATE POST TO REDUCE RUN LENGTH

DETAILS

10/27/2015

DECK and STAIR REQUIREMENTS IN PICTURES

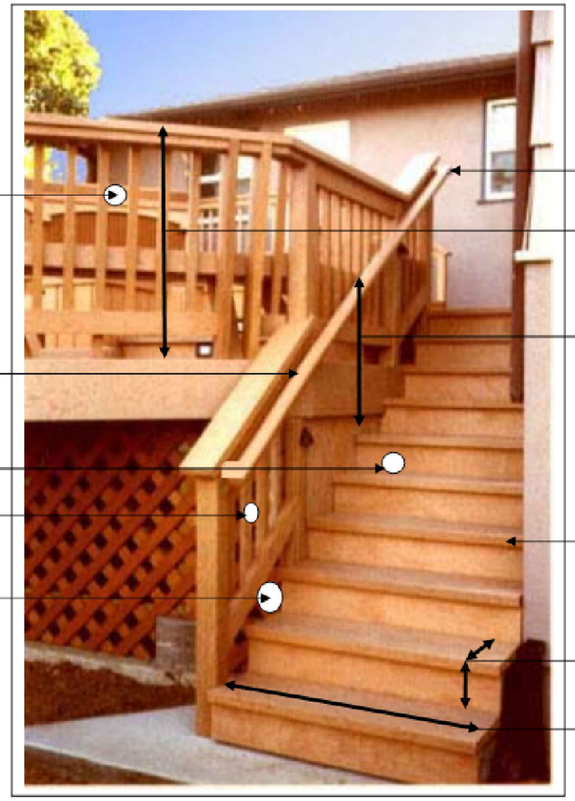

4" sphere shall not pass thru deck pickets

Handrails are required when there are more than 3 risers. A guard rail is required when the height of the walking surface is greater than 30" above grade

If riser is open, the opening shall not permit the passage of a 4" sphere.

4-3/8" sphere shall not pass thru on stair pickets

6" sphere shall not pass thru

Handrail returns to the post

Guardrail height minimum 36" above walking surface

Handrail height between 34-38" measured vertically from the nosing of the tread

Treads to have a nosing between ¾" and 1-1/4" beyond the riser

Maximum 8-1/4" risers, and minimum 9" treads (including the nosing)

Minimum 36" wide stairs

If the porch walking surface is less than 30" to grade (measured at 36" out from the edge of the porch) then the guardrails would not be required…and if put on as an option, they can be of any height.

Handrails are not required because there are less than 3 risers on the stairs.

This porch has built-in seating. If the porch walking surface is more than 30" to grade (measured at 36" out from the edge of the deck) then the guardrails must be at least 36" above the height of the seat.

Handrails are required because there are more than 3 risers on the stairs.

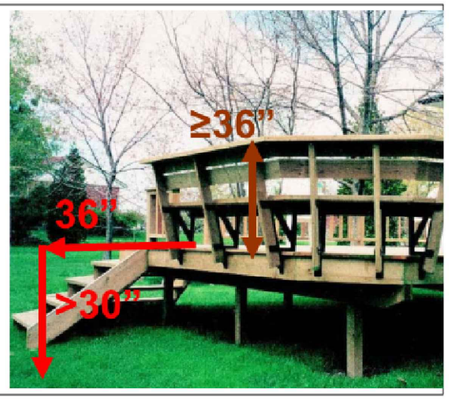

This porch has built-in seating. If the porch walking surface is less than 30" measured out 36" then guardrails are not required at all.

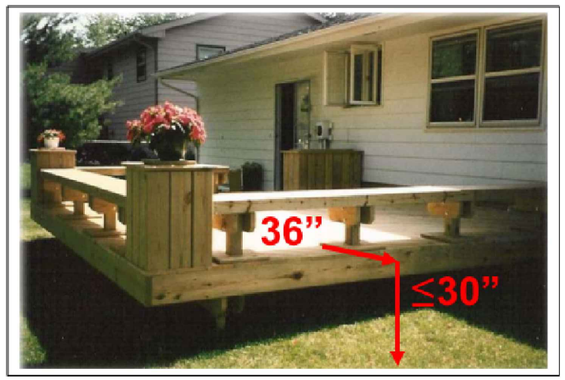

PICTURES